CITY OF NEW YORK
DEPARTMENT OF BUILDINGS

Pursuant to Administrative Code Section 27-131, the following equipment or material has been found acceptable for use in accordance with the Report of Materials and Equipment Acceptance (MEA) Division.

Richard C. Visconti, R.A., Acting Commissioner

MEA 171-00-M

Report of Material and Equipment Acceptance Division

Manufacturer - Star Maling Og Lakkfabrikk A/S, P.O. Box 593, Lierstranda, Norway.
Trade Name(s) - Carboline Nullifire S605.
Product - Mastic coating for fire protection, for Class II Buildings.
Pertinent Code Section(s) - 27-323, 27-324.
Prescribed Test(s) - RS 5-2 (ASTM E119).
Laboratory - Underwriters Laboratories, Inc.
Test Report - UL File R11193.
Description - Type Nullfire S605 mastic coating with Type TP615 top-coat per requirement of Underwriters Laboratories Inc. is designed to fire-proof interior and exterior steelwork of steel beams, columns, tubes, and pipes in Design Nos. D784 and D935.

Fire Resistance Ratings - ANSI/UL 263

Guide Information

Design No. D784

November 30, 1999

Restrained Assembly Ratings - 2 and 3 Hrs. (See Items 7 and 9)

Unrestrained Assembly Ratings-1, 1-1/2 and 2 Hrs. (See Items 7 and 9)

Unrestrained Beam Ratings-1, 1-1/2 and 2 Hrs. (See Items 7 and 9)

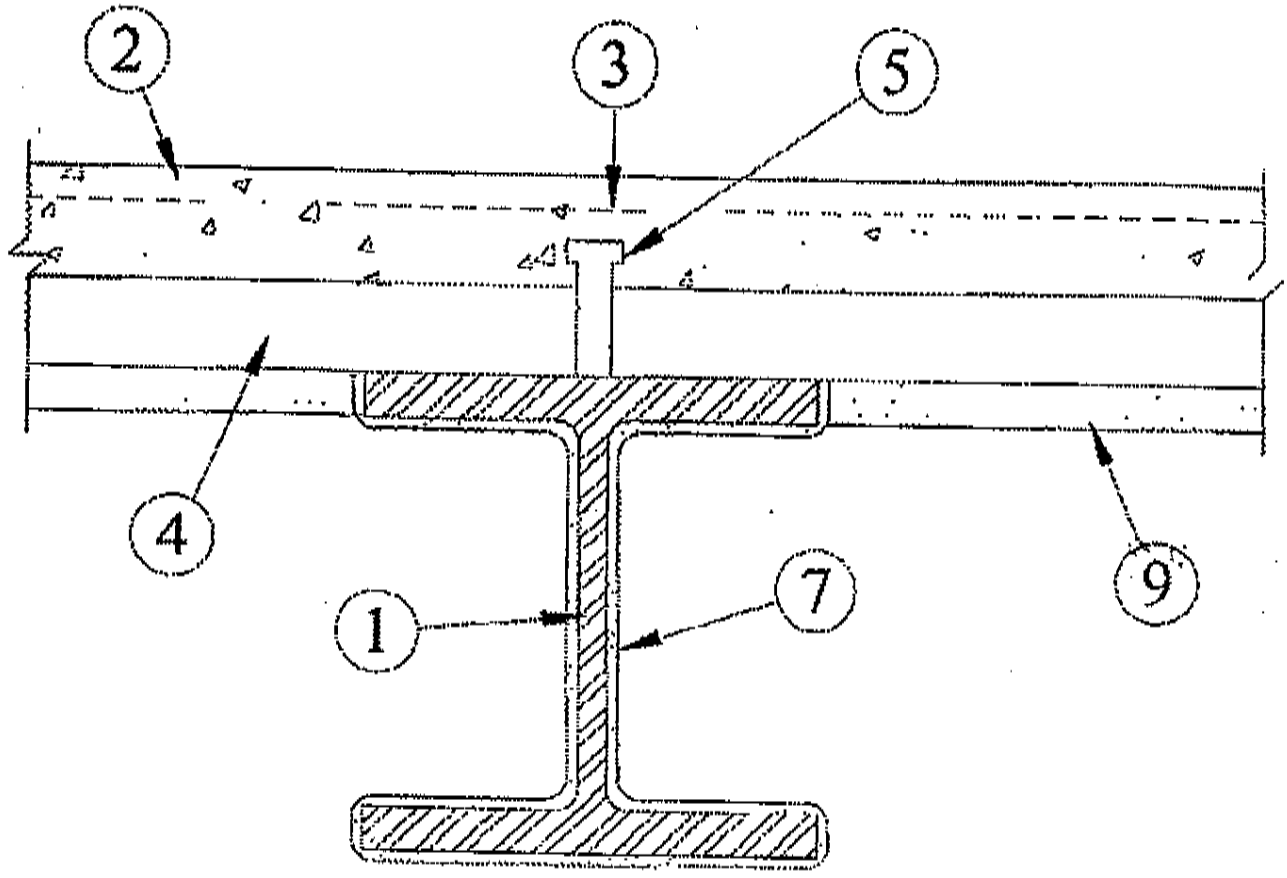

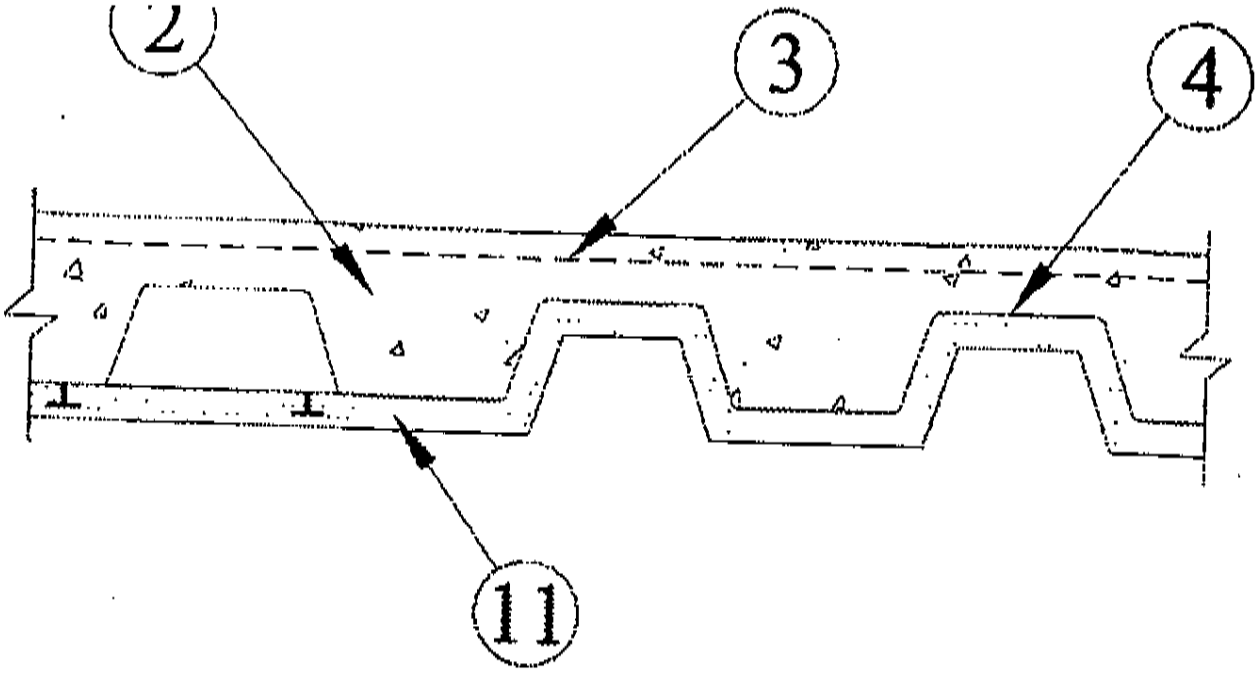

1. **Steel Beams** Any wide flange steel size shown in the table in Item 7. Beams shall be primed with a red oxide, zinc phosphate primer.

2. **Normal Weight or Lightweight Concrete** Min thickness above the crest 2-1/2 in. Normal weight concrete, carbonate or siliceous aggregate, 145 lb/ft^3 plus or minus 3 lb/ft^3 unit weight, 3000 psi compressive strength, vibrated. Lightweight concrete, expanded shale, clay or slate aggregate by rotary-kiln method, 102-120 lb/ft^3 unit weight, 3000 psi compressive strength, vibrated. 4 to 7 percent entrained air.

3. **Welded Wire Fabric** 6x6 — W1.4xW1.4.

4. **Steel Floor and Form Units*** Composite 1-1/2, 2, or 3 in. deep galv Units. Fluted units may be uncoated. Min gauges 22 MSG for fluted and 20/20 MSG for cellular. Any combination of fluted and cellular units may be used. Spacing of welds attaching unit to supports shall be 12 in. OC max unless specified otherwise, adjacent units button-punched or welded together at side joints and, unless specified otherwise for specific unit types, spacing of all side joint fastening systems shall not exceed 36 in. OC.

CONSOLIDATED SYSTEMS INC — 24 in. wide Types CFD-2, -3; 24, 30 or 36 in. wide Type CFD-1.5; 12, 24 or 36 in. wide Types Mac-Lok 2, Mac-Lok 3; 12 in. wide Mac-Way Cellular Types 2-633MTWA, 3-633MTWA, 2-633MTWV, 3-633MTWV. For the 1, 1-1/2, 2h Restrained Assembly Ratings and the 1h Unrestrained Assembly and Beam Rating, 12 in. wide, Type 1.5-633 MTWA may be used. Types CFD-1.5, CFD-2, CFD-3, Mac-Lok 2, Mac-Lok 3 may be phos/ptd. Two rows of steel studs with discs (Item 7) shall be welded along the sides of the Types 2-633MTWV, 3-633MTWV cellular units a max of 22 in. OC.

VULCRAFT, DIV OF

NUCOR CORP — 24, 30 or 36 in. wide Type 1.5VLI, 1.5VLP; 24 or 36 in. wide Types 2VLI, 3VLI, 2VLP, 3VLP. Types 1.5VLI, 2VLI, 3VLI units may be phos/ptd; 24 or 36 in. wide Types 2VLJ, 3VLJ units (+) may be used for max 2 hr Restrained Assembly.

(+)Side joints of Type 2VLJ or 3VLJ units may be fastened together with No. 8-3/4 in. long self-drilling Tek screws driven diagonally from the top side through the joint of the units at 36 in. OC max.

5. **Shear Connectors (Optional)** Studs, 3/4 in. diam (min 1/2 diam for use with steel joists) by 4-1/2 in. long, headed type or equivalent per AISC specification. Welded to the top flange of the beam, through the deck.

6. **Joint Cover** 2 in. wide pressure sensitive cloth tape.

7. **Mastic Coating*** Coating spray, brush or towel applied directly from containers to desired thickness. See table below for appropriate final dry thickness. After each coat, the surface shall be lightly rolled with a paint roller. Flutes above beam to be completely filled with mineral wool insulation having a minimum density of 6 lb/ft^3 or the top flange of the beam shall be protected with the same thickness of coating as required on the beam. For unrestrained assembly ratings see Item 9. The unrestrained beam rating shall be equal to the unrestrained assembly rating.

Restrained		

Unrestrained Beam Rating (Hr)		1	1-1/2	2	1-1/2	2
Steel Size	W/D	Thickness (In.)				
W5x19	0.78	0.094	0.104	0.249	NR	NR
W6x16	0.67	0.102	0.117	NR	NR	NR
W6x20	0.68	0.102	0.117	NR	NR	NR
W6x25	0.84	0.090	0.097	0.233	NR	NR
W8x21	0.67	0.103	0.118	NR	NR	NR
W8x24	0.70	0.100	0.113	NR	NR	NR
W8x28	0.81	0.091	0.099	0.239	NR	NR
W8x31	0.80	0.092	0.101	0.242	NR	NR
W8x35	0.90	0.086	0.091	0.219	NR	NR
W8x40	1.02	0.079	0.081	0.195	NR	NR
W8x48	1.20	0.072	0.072	0.167	NR	NR
W8x58	1.43	0.062	0.062	0.142	NR	NR
W8x67	1.63	0.056	0.056	0.125	NR	NR
W10x26	0.70	0.100	0.113	NR	NR	NR
W10x30	0.81	0.092	0.100	0.240	NR	NR
W10x33	0.79	0.093	0.102	0.245	NR	NR
W10x39	0.92	0.084	0.089	0.214	NR	NR
W10x45	1.05	0.077	0.078	0.189	NR	NR
W10x49	1.01	0.079	0.081	0.196	NR	NR
W10x54	1.11	0.074	0.075	0.180	NR	NR
W10x60	1.23	0.069	0.069	0.164	NR	NR
W10x68	1.38	0.064	0.064	0.147	NR	NR
W10x77	1.55	0.058	0.058	0.132	NR	NR
W10x88	1.75	0.043	0.048	0.104	NR	NR
W10x100	1.96	0.043	0.043	0.104	NR	NR
W10x112	2.17	0.043	0.043	0.095	NR	NR
W12x30	0.69	0.104	0.114	NR	NR	NR
W12x35	0.80	0.092	0.100	0.241	NR	NR
W12x40	0.86	0.088	0.094	0.226	NR	NR

W12x50	1.07	0.076	0.077	0.186	NR	NR
W12x53	1.01	0.079	0.081	0.196	NR	NR
W12x58	1.10	0.075	0.075	0.181	NR	NR
W12x65	1.11	0.074	0.074	0.180	NR	NR
W12x72	1.23	0.069	0.069	0.164	NR	NR
W12x79	1.34	0.065	0.065	0.151	NR	NR
W12x87	1.46	0.061	0.061	0.139	NR	NR
W12x96	1.61	0.056	0.056	0.127	NR	NR
W12x106	1.76	0.043	0.048	0.104	0.139	0.139
W12x120	1.98	0.043	0.043	0.104	0.139	0.139
W12x136	2.21	0.043	0.043	0.093	0.139	0.139
W12x152	2.45	0.043	0.043	0.084	0.139	0.139
W12x170	2.71	0.043	0.043	0.076	0.139	0.139
W12x190	2.99	0.043	0.043	0.069	0.139	0.139
W12x210	3.26	0.043	0.043	0.063	0.139	0.139
W12x230	3.53	0.043	0.043	0.058	0.139	0.139
W12x252	3.82	0.043	0.043	0.054	0.139	0.139
W12x279	4.16	0.043	0.043	0.049	0.139	0.139
W12x305	4.48	0.043	0.043	0.046	0.139	0.139
W12x336	4.85	0.043	0.043	0.043	0.139	0.139
W14x34	0.72	0.098	0.110	NR	NR	NR
W14x38	0.81	0.092	0.100	0.241	NR	NR
W14x43	0.87	0.088	0.094	0.226	NR	NR
W14x48	0.96	0.082	0.085	0.205	NR	NR
W14x53	1.05	0.077	0.078	0.189	NR	NR
W14x61	1.09	0.075	0.076	0.183	NR	NR
W14x68	1.21	0.070	0.070	0.166	NR	NR
W14x74	1.31	0.066	0.066	0.155	NR	NR
W14x82	1.44	0.061	0.061	0.141	NR	NR
W14x90	1.29	0.067	0.067	0.156	NR	NR
W14x99	1.42	0.062	0.062	0.143	NR	NR
W14x109	1.55	0.058	0.058	0.131	NR	NR

W14x132	1.85	0.043	0.043	0.104	0.139	0.139
W14x145	1.97	0.043	0.043	0.104	0.139	0.139
W14x159	2.14	0.043	0.043	0.096	0.139	0.139
W14x176	2.36	0.043	0.043	0.087	0.139	0.139
W14x193	2.57	0.043	0.043	0.080	0.139	0.139
W14x211	2.78	0.043	0.043	0.074	0.139	0.139
W14x233	3.04	0.043	0.043	0.068	0.139	0.139
W14x257	3.32	0.043	0.043	0.062	0.139	0.139
W14x283	3.62	0.043	0.043	0.057	0.139	0.139
W14x311	3.93	0.043	0.043	0.052	0.139	0.139
W14x342	4.27	0.043	0.043	0.048	0.139	0.139
W14x370	4.57	0.043	0.043	0.045	0.139	0.139
W14x398	4.87	0.043	0.043	0.043	0.139	0.139
W14x426	5.15	0.043	0.043	0.043	0.139	0.139
W14x455	5.45	0.043	0.043	0.043	0.139	0.139
W14x500	5.89	0.043	0.043	0.043	0.139	0.139
W14x550	6.37	0.043	0.043	0.043	0.139	0.139
W14x605	6.89	0.043	0.043	0.043	0.139	0.139
W14x665	7.43	0.043	0.043	0.043	0.139	0.139
W14x730	7.99	0.043	0.043	0.043	0.139	0.139
W16x36	0.70	0.100	0.113	NR	NR	NR
W16x40	0.77	0.094	0.104	0.250	NR	NR
W16x45	0.87	0.088	0.094	0.226	NR	NR
W16x50	0.96	0.082	0.086	0.206	NR	NR
W16x57	1.08	0.076	0.076	0.184	NR	NR
W16x67	1.08	0.076	0.076	0.184	NR	NR
W16x77	1.24	0.069	0.069	0.163	NR	NR
W16x89	1.42	0.062	0.062	0.143	NR	NR
W16x100	1.58	0.057	0.057	0.129	NR	NR
W18x35	0.67	0.103	0.118	NR	NR	NR
W18x40	0.76	0.095	0.105	0.253	NR	NR
W18x46	0.87	0.088	0.093	0.225	NR	NR

[illegible]	0.88	0.087	0.093	0.223	NR	NR
W18x55	0.96	0.082	0.085	0.206	NR	NR
W18x60	1.04	0.078	0.079	0.191	NR	NR
W18x65	1.12	0.074	0.074	0.178	NR	NR
W18x71	1.22	0.070	0.070	0.165	NR	NR
W18x76	1.12	0.074	0.074	0.179	NR	NR
W18x86	1.26	0.068	0.068	0.160	NR	NR
W18x97	1.41	0.062	0.062	0.144	NR	NR
W18x106	1.53	0.059	0.059	0.133	NR	NR
W18x119	1.71	0.054	0.054	0.120	NR	NR
W21x44	0.74	0.097	0.108	NR	NR	NR
W21x50	0.84	0.090	0.097	0.232	NR	NR
W21x57	0.95	0.083	0.086	0.208	NR	NR
W21x62	0.95	0.083	0.086	0.207	NR	NR
W21x68	1.04	0.078	0.079	0.191	NR	NR
W21x73	1.11	0.074	0.074	0.180	NR	NR
W21x83	1.26	0.068	0.068	0.160	NR	NR
W21x93	1.40	0.063	0.063	0.145	NR	NR
W21x101	1.30	0.066	0.066	0.155	NR	NR
W21x111	1.42	0.062	0.062	0.143	NR	NR
W21x122	1.55	0.058	0.058	0.131	NR	NR
W21x132	1.67	0.055	0.055	0.122	NR	NR
W21x147	1.85	0.043	0.043	0.104	0.139	0.139
W24x55	0.090	0.098	0.098	0.235	NR	NR
W24x62	0.93	0.084	0.088	0.212	NR	NR
W24x68	0.94	0.084	0.087	0.211	NR	NR
W24x76	1.04	0.078	0.079	0.191	NR	NR
W24x84	1.14	0.073	0.073	0.175	NR	NR
W24x94	1.27	0.067	0.067	0.159	NR	NR
W24x104	1.23	0.069	0.069	0.163	NR	NR
W24x117	1.38	0.064	0.064	0.147	NR	NR
W24x131	1.53	0.059	0.059	0.133	NR	NR

W24x162	1.87	0.043	0.043	0.104	0.139	0.139
W27x84	1.03	0.078	0.080	0.192	NR	NR
W27x94	1.15	0.073	0.073	0.174	NR	NR
W27x102	1.24	0.069	0.069	0.162	NR	NR
W27x114	1.38	0.063	0.063	0.147	NR	NR
W27x146	1.55	0.058	0.058	0.132	NR	NR
W27x161	1.70	0.054	0.054	0.121	NR	NR
W27x178	1.87	0.043	0.043	0.104	0.139	0.139
W30x99	1.12	0.074	0.074	0.179	NR	NR
W30x108	1.21	0.070	0.070	0.166	NR	NR
W30x116	1.30	0.066	0.066	0.144	NR	NR
W30x124	1.38	0.063	0.063	0.147	NR	NR
W30x132	1.47	0.061	0.061	0.138	NR	NR
W30x173	1.67	0.055	0.055	0.122	NR	NR
W30x191	1.84	0.051	0.051	0.104	NR	NR
W30x211	2.02	0.047	0.047	0.102	0.139	0.139
W33x118	1.21	0.070	0.070	0.167	NR	NR
W33x130	1.32	0.066	0.066	0.153	NR	NR
W33x141	1.43	0.062	0.062	0.142	NR	NR
W33x152	1.53	0.059	0.059	0.133	NR	NR
W33x201	1.80	0.052	0.052	0.114	0.139	0.139
W33x221	1.96	0.043	0.043	0.104	0.139	0.139
W33x241	2.13	0.045	0.045	0.097	0.139	0.139
W36x135	1.29	0.067	0.067	0.156	NR	NR
W36x150	1.43	0.062	0.062	0.142	NR	NR
W36x160	1.52	0.059	0.059	0.134	NR	NR
W36x170	1.61	0.056	0.056	0.127	NR	NR
W36x182	1.71	0.054	0.054	0.119	NR	NR
W36x194	1.82	0.043	0.046	0.104	0.139	0.139
W36x210	1.96	0.043	0.043	0.104	0.139	0.139
W36x230	1.95	0.043	0.043	0.104	0.139	0.139
W36x245	2.07	0.043	0.043	0.100	0.139	0.139

W36x280	2.35	0.043	0.043	0.088	0.139	0.139
W36x300	2.50	0.043	0.043	0.082	0.139	0.139

NR - Not Rated

CARBOLINE CO — Type Nullifire S605. Investigated for Interior General Purpose.

8. Topcoat Type TS 615 top-coat applied over the base coat at 0.003 in. thickness.

9. Spray-Applied Fire Resistive Materials* Applied to steel floor units (Item 4) by mixing with water and spraying to steel surfaces which must be clean and free of dirt, loose scale and oil. Min avg and min ind density of 15/14 pcf respectively for the Type 15 and 15-High Yield, 22/18 pcf, respectively for the Type 22, 40/37 pcf respectively for the Type 40, 28/25 pcf respectively for the Type 239, 44.5/42 respectively for the 240 High Yield, and 55/50 respectively for the Type 241. For method of density determination, refer to Design Information Section. May be used only in general floor areas without concrete penetrations with all fluted steel floor units or blends consisting of one or more fluted units to one 24 in. wide max cellular unit, 1-1/2 or 3 in. deep, with cells spaced approx 6 and 8 in. respectively. Use of steel studs with discs (Item 11) is required on all cellular units with flat plate on the bottom, optional on other steel surfaces

Restrained Assembly Rating Hr.	Unrestrained Assembly Rating Hr.***	Min Thk of Spray Applied Fire Resistive Mtl (In.)*		
		Crests	Valey	Flat Plate
1 and 2	1	3/8	3/8	3/8
2	1-1/2	3/8	3/8	3/8
2	2	3/8	3/8	3/8
3	1-1/2	11/16	1/2	1/2
3	2	11/16	1/2	1/2

* Where metal lath (Item 9) is required thickness of material shall be measured to the face of the lath

** Min thickness of 1/2 in. is required in crests of 1-1/2 in. deep fluted units for a 2 Hr. Restrained Assembly Rating.

*** Unrestrained Beam Rating (See Item 7) shall be equal to the Unrestrained Assembly Rating.

CARBOLINE CO — Types 15, 15-High Yield, 22, 40, 239, 240-High Yield, 241

CARBOLINE KOREA LTD — Types 15, 15-High Yield, 22, 40, 239, 240-High Yield, 241

CARBOLINE MIDDLE EAST L L C — Types 15, 15-High Yield, 22, 40, 239, 240-High Yield, 241

CARBOLINE SOUTHEAST ASIA PTE LTD — Types 15, 15-High Yield, 22, 40, 239, 240-High Yield, 241

CDC CARBOLINE (INDIA) PVT LTD — Types 15, 15-High Yield, 22, 40, 239, 240-High Yield, 241, CDC Crete 15, CDC Crete 15-High Yield, CDC Crete 22, CDC Crete 40, CDC Crete 239, CDC Crete 240-High Yield, CDC Crete 241.

CENTRAL PAINTS IND INC LTD — Types 15, 15-High Yield, 22, 40, 239, 240-High Yield, 241

10. Metal Lath (not shown) Where Types 40, 239, 240 High-Yield and 241 are applied to steel deck, fluted or cellular, 3/8 in. metal ribbed lath weighing 3.4 lb/yd^2 shall be secured to the underside of the steel deck (ribs upward) with S-12 by 3/8 in. long panhead, self-tapping steel screws spaced 12 in. OC in all directions. Steel screws shall be fitted with 1/2 in. diameter steel washers. Adjacent pieces of lath shall be overlapped 1 in. minimum. Entire surface of deck shall be lathed.

11. Steel Studs With Discs For use with Types 15, 15-High Yield and 22, studs consist of No. 12 SWG galvanized steel wire welded to 1-3/16 in. diameter No. 28 MSG galvanized steel disc. The ends of the studs opposite the disc shall be welded to the cellular floor units. The spacing of the rows shall not exceed 22 in. Spacing between studs along the rows shall not exceed 24 in. The total number of studs shall average not less than one stud per 236 in.^{2} of cellular floor units.

*Bearing the UL Classification Marking

Fire Resistance Ratings - ANSI/UL 263

Guide Information

Design No. D935

December 04, 1999

Restrained Assembly Ratings-2 and 3 Hr. (See Items 2, 5 and 7)

Unrestrained Assembly Ratings-1, 1-1/2 and 2 Hr. (See Items 2, 5 and 7)

Unrestrained Beam Ratings-1, 1-1/2 and 2 Hr. (See Items 2, 5 and 7)

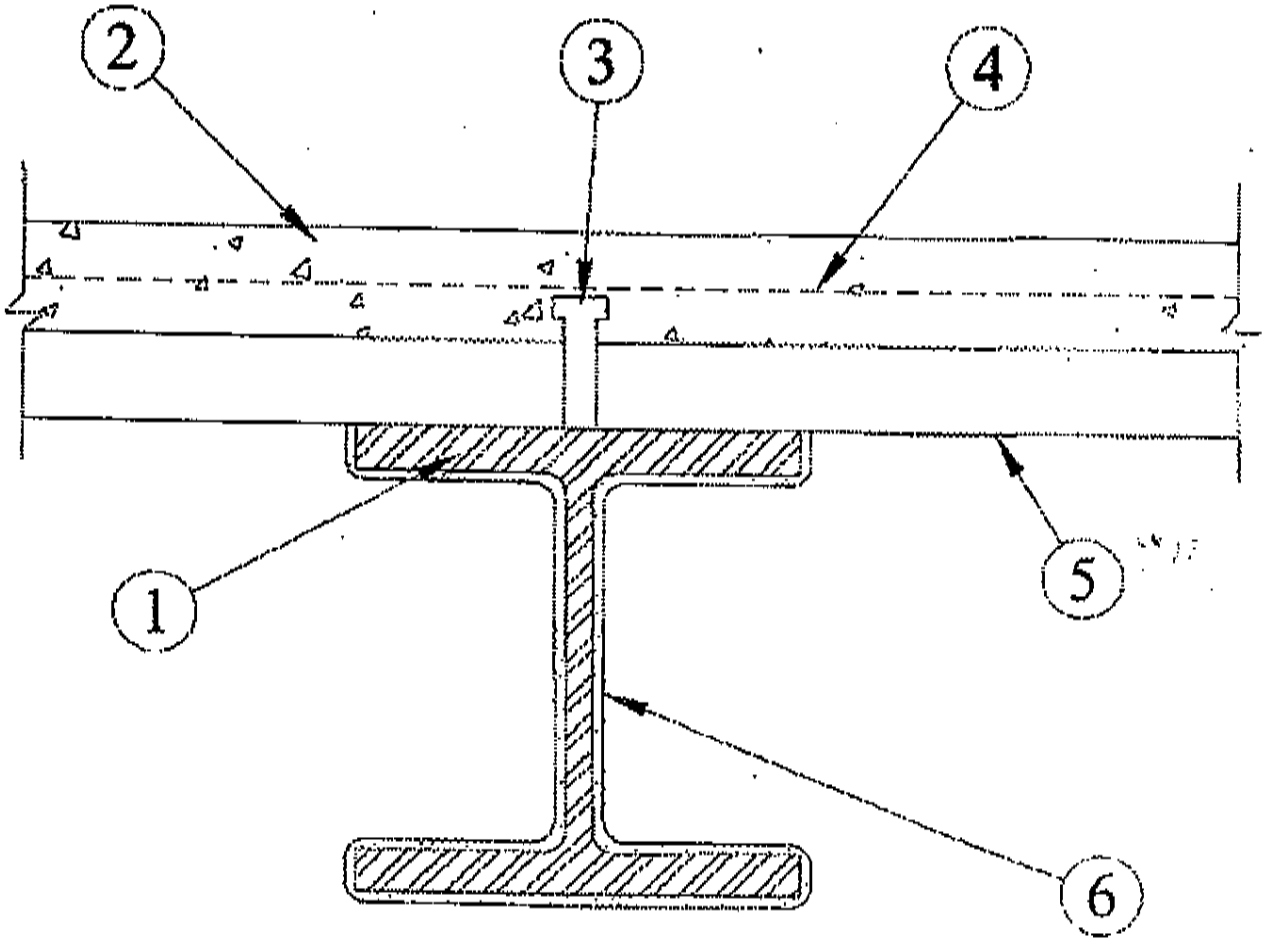

1. **Steel Beams** Any wide flange steel size shown in the table in Item 7. Beams shall

2. Normal Weight or Lightweight Concrete Normal weight concrete, carbonate or siliceous aggregate, 145 lb/ft^3 plus or minus 3 lb/ft^3 unit weight, 3000 psi compressive strength, vibrated.

Lightweight concrete, expanded shale, clay or slate aggregate by rotary-kiln method, 102-120 lb/ft^3 unit weight, 3000 psi compressive strength, vibrated, 4 to 7 percent entrained air. Min thickness shown in the table below:

Restrained Assembly Rating Hr	Concrete (Type)	Concrete Unit Weight pcf	Concrete Thkns In.
1	Normal Weight	147-153	3-1/2
1-1/2	Normal Weight	147-153	4
2	Normal Weight	147-153	4-1/2
3	Normal Weight	147-153	5-1/4
1	Lightweight	107-120	2-5/8
1-1/2	Lightweight	107-113	3
2	Lightweight	107-113	3-1/4
2	Lightweight	107-116	3-1/4*
2	Lightweight	114-120	3-1/2
3	Lightweight	107-113	4-3/16
3	Lightweight	114-120	4-7/16

*For use with 2 or 3 in. steel floor and form units only.

3. Shear Connectors (Optional) Studs, 3/4 in. diam (min 1/2 diam for use with steel joists) by 4-1/2 in. long, headed type or equivalent per AISC specification. Welded to the top flange of the beam, through the deck.

4. Welded Wire Fabric 6x6 — W1.4xW1.4.

5. Steel Floor and Form Units* Composite 1-1/2, 2, or 3 in. deep galv Units. Fluted units may be uncoated. Min gauges 22 MSG for fluted and 20/20 MSG for cellular. Any combination of fluted and cellular units may be used. Spacing of welds attaching units to supports shall be 12 in. OC max unless specified otherwise, adjacent units button-punched or welded together at side joints and, unless specified otherwise for specific unit types, spacing of all side joint fastening systems shall not exceed 36 in. OC.

CONSOLIDATED SYSTEMS INC — 24 in. wide Types CFD-2, -3; 24, 30 or 36 in. wide Type CFD-1.5;12, 24 or 36 in. wide Types Mac-Lok 2, Mac-Lok 3; 12 in. wide Mac-Way Cellular Types 2-633MTWA, 3-633MTWA, 2-633MTWV, 3-633MTWV. For the 1, 1-1/2, 2h Restrained Assembly Ratings and the 1h Unrestrained Assembly and Beam Rating, 12 in. wide, Type 1.5-633 MTWA may be used. Types CFD-1.5, CFD-2, CFD-3, Mac-Lok 2, Mac-Lok 3 may be phos/ptd. Two rows of steel studs with discs (Item 7) shall be welded along the sides of the Types 2-633MTWV, 3-633MTWV cellular units a max of 22 in. OC.

VULCRAFT, DIV OF

NUCOR CORP — 24, 30 or 36 in. wide Type 1.5VLI, 1.5VLP;24 or 36 in. wide Types 2VLI, 3VLI, 2VLP, 3VLP. Types 1.5VLI, 2VLI, 3VLI units may be phos/ptd; 24 or 36 in. wide Types 2VLJ, 3VLJ units (+) may be used for max 2 hr. Restrained Assembly.

(+)Side joints of Type 2VLJ or 3VLJ units may be fastened together with No. 8-3/4 in. long self-drilling Tek screws driven diagonally from the top side through the joint of the units at 36 in. OC max.

The Unrestrained Assembly Rating is equal to the Unrestrained Beam Rating for a max of 3 Hr and is limited to the following units and limitations:

(a) 1-1/2 in. deep, 24 in. wide, 22 MSG or thicker fluted with clear spans not more than 7 ft 8 in.

(b) 1-1/2 in. deep, 24 in. wide, 20 MSG or thicker fluted with clear spans not more than 8 ft 8 in

(c) 1-1/2 in. deep, 24 in. wide, 16 MSG or thicker fluted and 18/18 MDG or thicker cellular with clear spans not more than 9 ft 11 in.

(d) 3 in. deep, 36 in. wide, 18 MSG or thicker fluted and 24 in. wide, 20 18 MSG or thicker cellular with clear spans not more than 13 ft 2 in.

appropriate final dry thickness. After each coat, the surface shall be lightly rolled with a paint roller. Flutes above beam to be completely filled with mineral wool insulation having a minimum density of 6 lb/ft^3 or the top flange of the beam shall be protected with the same thickness of coating as required on the beam.

Restrained Assembly Rating (Hr)		2			3	
Unrestrained Beam Rating (Hr)		1	1-1/2	2	1-1/2	2
Steel Size	W/D	Thickness (In.)				
W5x19	0.78	0.094	0.104	0.249	NR	NR
W6x16	0.67	0.102	0.117	NR	NR	NR
W6x20	0.68	0.102	0.117	NR	NR	NR
W6x25	0.84	0.090	0.097	0.233	NR	NR
W8x21	0.67	0.103	0.118	NR	NR	NR
W8x24	0.70	0.100	0.113	NR	NR	NR
W8x28	0.81	0.091	0.099	0.239	NR	NR
W8x31	0.90	0.086	0.091	0.219	NR	NR
W8x40	1.02	0.079	0.081	0.195	NR	NR
W8x48	1.20	0.072	0.072	0.167	NR	NR
W8x58	1.43	0.062	0.062	0.142	NR	NR
W8x67	1.63	0.056	0.056	0.125	NR	NR
W10x26	0.70	0.100	0.113	NR	NR	NR
W10x30	0.81	0.092	0.100	.240	NR	NR
W10x33	0.79	0.093	0.102	0.245	NR	NR
W10x39	0.92	0.084	0.089	0.214	NR	NR
W10x45	1.05	0.077	0.078	0.189	NR	NR
W10x49	1.01	0.079	0.081	0.196	NR	NR
W10x54	1.11	0.074	0.075	0.180	NR	NR
W10x60	1.23	0.069	0.069	0.164	NR	NR
W10x68	1.38	0.064	0.064	0.147	NR	NR
W10x77	1.55	0.058	0.058	0.132	NR	NR
W10x88	1.75	0.043	0.048	0.104	NR	NR
W10x100	1.96	0.043	0.043	0.104	NR	NR
W10x112	2.17	0.043	0.043	0.095	NR	NR

W12x35	0.80	0.092	0.100	0.241	NR	NR
W12x40	0.86	0.088	0.094	0.226	NR	NR
W12x45	0.97	0.082	0.085	0.204	NR	NR
W12x50	1.07	0.076	0.077	0.186	NR	NR
W12x53	1.01	0.079	0.081	0.196	NR	NR
W12x58	1.10	0.075	0.075	0.181	NR	NR
W12x65	1.11	0.074	0.074	0.180	NR	NR
W12x72	1.23	0.069	0.069	0.164	NR	NR
W12x79	1.34	0.065	0.065	0.151	NR	NR
W12x87	1.46	0.061	0.061	0.139	NR	NR
W12x96	1.61	0.056	0.056	0.127	NR	NR
W12x106	1.76	0.043	0.048	0.104	0.139	0.139
W12x120	1.98	0.043	0.043	0.104	0.139	0.139
W12x136	2.21	0.043	0.043	0.093	0.139	0.139
W12x152	2.45	0.043	0.043	0.084	0.139	0.139
W12x170	2.71	0.043	0.043	0.076	0.139	0.139
W12x190	2.99	0.043	0.043	0.069	0.139	0.139
W12x210	3.26	0.043	0.043	0.063	0.139	0.139
W12x230	3.53	0.043	0.043	0.058	0.139	0.139
W12x252	3.82	0.043	0.043	0.054	0.139	0.139
W12x279	4.16	0.043	0.043	0.049	0.139	0.139
W12x305	4.48	0.043	0.043	0.046	0.139	0.139
W12x336	4.85	0.043	0.043	0.043	0.139	0.139
W14x34	0.72	0.098	0.110	NR	NR	NR
W14x38	0.81	0.092	0.100	0.241	NR	NR
W14x43	0.87	0.088	0.094	0.226	NR	NR
W14x48	0.96	0.082	0.085	0.205	NR	NR
W14x53	1.05	0.077	0.078	0.189	NR	NR
W14x61	1.09	0.075	0.076	0.183	NR	NR
W14x68	1.21	0.070	0.070	0.166	NR	NR
W14x74	1.31	0.066	0.066	0.155	NR	NR
W14x82	1.44	0.061	0.061	0.141	NR	NR

[illegible]	[illegible]	0.067	0.067	0.156	NR	NR
W14x99	1.42	0.062	0.062	0.143	NR	NR
W14x109	1.55	0.058	0.058	0.131	NR	NR
W14x120	1.69	0.054	0.054	0.121	NR	NR
W14x132	1.85	0.043	0.045	0.104	0.139	0.139
W33x141	1.43	0.062	0.062	0.142	NR	NR
W33x152	1.53	0.059	0.059	0.133	NR	NR
W33x201	1.80	0.043	0.043	0.114	0.139	0.139
W33x221	1.96	0.043	0.043	0.104	0.139	0.139
W33x241	2.13	0.043	0.043	0.097	0.139	0.139
W36x135	1.29	0.043	0.043	0.156	NR	NR
W36x150	1.43	0.043	0.043	0.142	NR	NR
W36x160	1.52	0.043	0.043	0.134	NR	NR
W36x170	1.61	0.043	0.043	0.127	NR	NR
W36x182	1.71	0.043	0.043	0.119	NR	NR
W36x194	1.82	0.043	0.043	0.104	0.139	0.139
W36x210	1.96	0.043	0.043	0.104	0.139	0.139
W36x230	1.95	0.043	0.043	0.104	0.139	0.139
W36x245	2.07	0.043	0.043	0.100	0.139	0.139
W36x260	2.19	0.043	0.043	0.094	0.139	0.139
W36x280	2.35	0.043	0.043	0.088	0.139	0.139
W36x300	2.50	0.043	0.043	0.082	0.139	0.139

NR - Not Rated

CARBOLINE CO — Type Nullifire S605. Investigated for Interior General Purpose.

8. Topcoat Type TS 615 top-coat applied over the base coat at 0.003 in. thickness.

*Bearing the UL Classification Marking

Recommendation - That the above described assemblies be accepted for Class II Buildings only, as having the fire resistance ratings given above, when members framing into the columns have at least the same fire resistance rating, provided that following requirements for application and protection of the mastic coating fireproofing be adhered to:

1. Where used for protection of floor ceiling and/or assemblies in roof/ceiling in fireproof buildings each such assembly shall bear an identifying tag installed at each beam. Subject tag shall be of metal construction mechanically attached to such beams and shall state the following: "this beam has been fireproofed with MEA approved Nullifire S605 with Type TP615 top-coat finish and such finish shall not be removed" nor any subsequent coating shall be applied other than Nullifire S605 with Type TP615 top-coat.

2. The general contractor and the owner shall provide qualified personnel to supervise the application of the sprayed-on fireproofing. They shall certify to the Department of Buildings that the finished fireproofing of the completed building is in full compliance with the acceptance requirements and drawings approved by the Department of Buildings.

3. The installation of the sprayed on fire protection shall be subject to the controlled inspection requirements of Section 27-132.

4. The use of this material shall be subject to all pertinent regulations of the Department of Air Resources and the Department of Health.

5. All installations shall comply with 118-68 GR, the New York City Building Code, the Fire Department Directives, the manufacturer's instructions and laboratory recommendation.

6. All shipments and deliveries of the materials comprising this assembly shall be accompanied by a certificate or label certifying that the materials shipped or delivered are equivalent to those tested and acceptable for use, as provided for in Section 27-131 of the Building Code.

Final Acceptance JUL 27 2000

Examined by S Derbhudan

CITY OF NEW YORK
DEPARTMENT OF BUILDINGS

Pursuant to Administrative Code Section 27-131, the following equipment or material has been found acceptable for use in accordance with the Report of Materials and Equipment Acceptance (MEA) Division.

Richard C. Visconti, R.A., Acting Commissioner

MEA 172-00-M

Report of Material and Equipment Acceptance Division

Manufacturer - Star Maling Og Lakkfabrikk A/S, P.O. Box 593, Lierstranda, Norway.
Trade Name(s) - Carboline Nullifire S605.
Product - Mastic coating for fire protection, for Class II Buildings.
Pertinent Code Section(s) - 27-323, 27-324.
Prescribed Test(s) - RS 5-2 (ASTM E119).
Laboratory - Underwriters Laboratories, Inc.
Test Report - UL File R11193.
Description - Type Nullifire S605 mastic coating with Type TP615 top-coat per requirement of Underwriters Laboratories Inc. is designed to fire-proof interior and exterior steelwork of steel beams, columns, tubes, and pipes in Design No. N609.

Fire Resistance Ratings - ANSI/UL 263

Guide Information

Design No. N609

December 02, 1999

Restrained Beam Ratings — 1, 1-1/2, 2 and 3 Hr (See Item 6)

Unrestrained Beam Ratings — 1, 1-1/2 and 2 Hr (See Item 6)

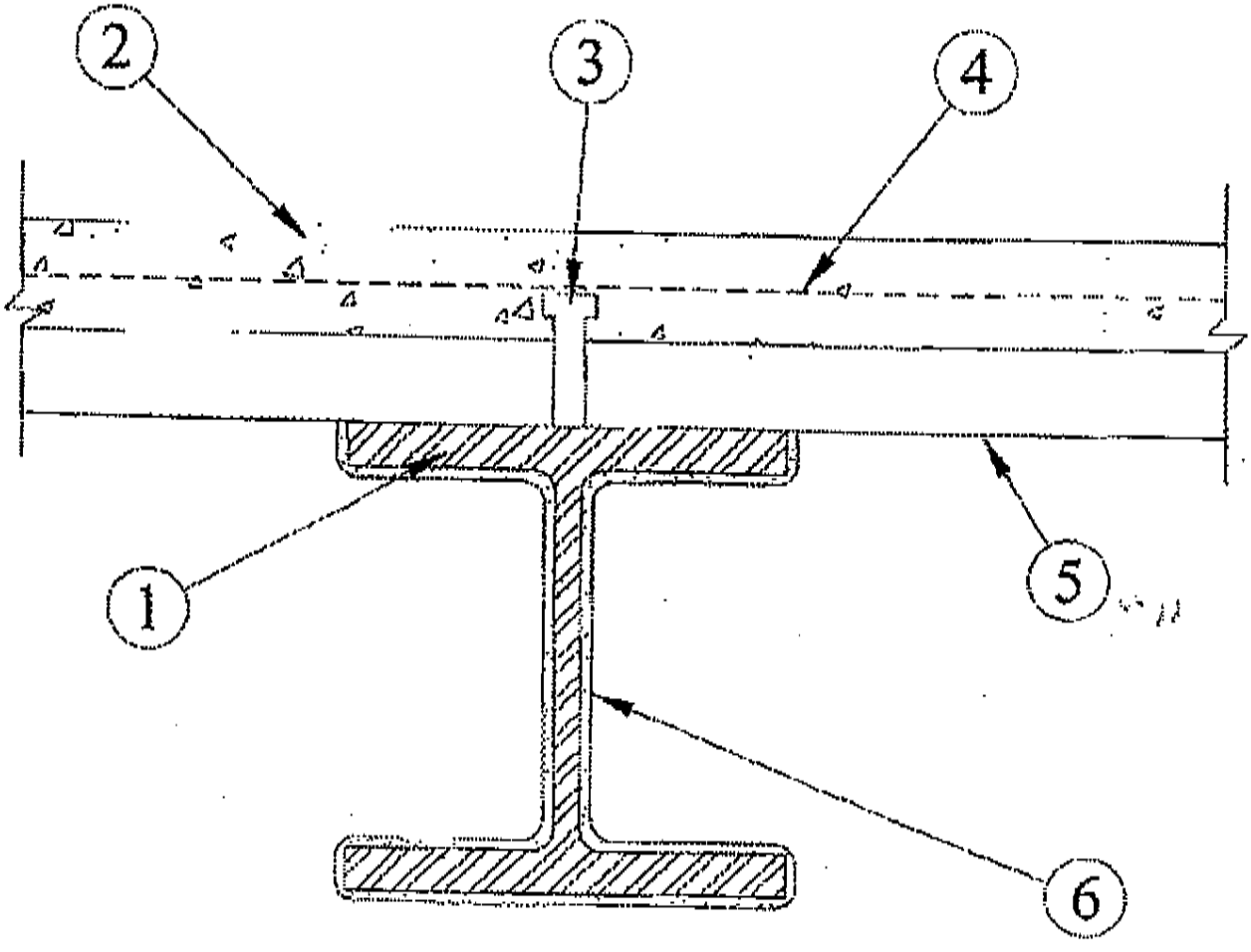

1. **Steel Beam** Wide flange steel beams with the minimum sizes shown in the tables below. Beams shall be free of dirt, loose scale and oil. Beam shall be primed with a red oxide zinc phosphate primer.

normal weight concrete either carbonate or siliceous aggregate may be used. Unit weight 148 lbs/cu ft for normal weight concrete and 110 lbs/cu ft for lightweight concrete.

3. **Shear Connector** —(Optional)—Studs, 3/4 in. diam headed type or equivalent per AISC specifications welded to the top flange of beam through the steel floor units.

4. **Welded Wire Fabric** 6x6-10/10 SWG.

5. **Steel Floor and Form Units** 1-1/2, 2 or 3 in. deep fluted, cellular or corrugated units welded to beam.

6. **Mastic Coating*** Coating spray, brush or trowel applied directly from containers to desired thickness. See table below for appropriate final dry thickness. Flutes above beam to be completely filled with mineral wool insulation having a minimum density of 6 lbs/ft ^{3} or the top flange of the beam shall be protected with the same thickness of coating as required on the beam.

The following thickness apply for unrestrained beams supporting corrugated, fluted or cellular floor units topped with lightweight or normal weight concrete:

UNRESTRAINED BEAM RATINGS

STEEL SIZE	W/D	1 HR	1-1/2 HR	2 HR
W5x19	0.78	0.074	0.104	0.249
W6x16	0.67	0.074	0.117	NR
W6x20	0.68	0.074	0.117	NR
W6x25	0.84	0.074	0.097	0.233
W8x21	0.67	0.074	0.118	NR
W8x24	0.70	0.074	0.113	NR
W8x28	0.81	0.074	0.099	0.239
W8x31	0.80	0.074	0.101	0.242
W8x35	0.90	0.074	0.091	0.219
W8x40	1.02	0.074	0.081	0.195
W8x48	1.20	0.072	0.072	0.167
W8x58	1.43	0.058	0.058	0.142
W8x67	1.63	0.054	0.054	0.125
W10x26	0.70	0.074	0.113	NR
W10x30	0.81	0.074	0.100	0.240
W10x33	0.79	0.074	0.102	0.245
W10x39	0.92	0.074	0.089	0.214

W10x49	1.01	0.074	0.081	0.196
W10x54	1.11	0.074	0.075	0.180
W10x60	1.23	0.071	0.071	0.164
W10x68	1.38	0.062	0.062	0.147
W10x77	1.55	0.054	0.054	0.132
W10x88	1.75	0.043	0.048	0.104
W10x100	1.96	0.043	0.043	0.104
W10x112	2.17	0.043	0.043	0.095
W12x30	0.69	0.074	0.114	NR
W12x35	0.80	0.074	0.100	0.241
W12x40	0.86	0.074	0.094	0.226
W12x45	0.97	0.074	0.085	0.204
W12x50	1.07	0.074	0.077	0.186
W12x53	1.01	0.074	0.081	0.196
W12x58	1.10	0.074	0.075	0.181
W12x65	1.11	0.074	0.074	0.180
W12x72	1.23	0.068	0.068	0.164
W12x79	1.34	0.062	0.062	0.151
W12x87	1.46	0.057	0.057	0.139
W12x96	1.61	0.052	0.052	0.127
W12x106	1.76	0.043	0.048	0.104
W12x120	1.98	0.043	0.043	0.104
W12x136	2.21	0.043	0.043	0.093
W12x152	2.45	0.043	0.043	0.084
W12x170	2.71	0.043	0.043	0.076
W12x190	2.99	0.043	0.043	0.069
W12x210	3.26	0.043	0.043	0.063
W12x230	3.53	0.043	0.043	0.058
W12x252	3.82	0.043	0.043	0.054
W12x279	4.16	0.043	0.043	0.049
W12x305	4.48	0.043	0.043	0.046
W12x336	4.85	0.043	0.043	0.043

W14x38	0.81	0.074	0.100	0.241
W14x43	0.87	0.074	0.094	0.226
W14x48	0.96	0.074	0.085	0.205
W14x53	1.05	0.074	0.078	0.189
W14x61	1.09	0.074	0.076	0.183
W14x68	1.21	0.069	0.069	0.166
W14x74	1.31	0.064	0.064	0.155
W14x82	1.44	0.058	0.058	0.141
W14x90	1.29	0.064	0.064	0.156
W14x99	1.42	0.059	0.059	0.143
W14x109	1.55	0.054	0.054	0.131
W14x120	1.69	0.049	0.049	0.121
W14x132	1.85	0.043	0.043	0.104
W14x145	1.97	0.043	0.043	0.104
W14x159	2.14	0.043	0.043	0.096
W14x176	2.36	0.043	0.043	0.087
W14x193	2.57	0.043	0.043	0.080
W14x211	2.78	0.043	0.043	0.074
W14x233	3.04	0.043	0.043	0.068
W14x257	3.32	0.043	0.043	0.062
W14x283	3.62	0.043	0.043	0.057
W14x311	3.93	0.043	0.043	0.052
W14x342	4.27	0.043	0.043	0.048
W14x370	4.57	0.043	0.043	0.045
W14x398	4.87	0.043	0.043	0.043
W14x426	5.15	0.043	0.043	0.043
W14x455	5.45	0.043	0.043	0.043
W14x500	5.89	0.043	0.043	0.043
W14x550	6.37	0.043	0.043	0.043
W14x605	6.89	0.043	0.043	0.043
W14x665	7.43	0.043	0.043	0.043
W14x730	7.99	0.043	0.043	0.043

W16x40	0.77	0.074	0.104	0.250
W16x45	0.87	0.074	0.094	0.226
W16x50	0.96	0.074	0.086	0.206
W16x57	1.08	0.074	0.076	0.184
W16x67	1.08	0.074	0.076	0.184
W16x77	1.24	0.067	0.069	0.163
W16x89	1.42	0.059	0.062	0.143
W16x100	1.58	0.053	0.053	0.129
W18x35	0.67	0.074	0.118	NR
W18x40	0.76	0.074	0.105	0.253
W18x46	0.87	0.074	0.093	0.225
W18x50	0.88	0.074	0.093	0.223
W18x55	0.96	0.074	0.085	0.206
W18x60	1.04	0.074	0.079	0.191
W18x65	1.12	0.074	0.074	0.178
W18x71	1.22	0.068	0.068	0.165
W18x76	1.12	0.074	0.074	0.179
W18x86	1.26	0.066	0.068	0.160
W18x97	1.41	0.059	0.059	0.144
W18x106	1.53	0.055	0.055	0.133
W18x119	1.71	0.049	0.049	0.120
W21x44	0.74	0.074	0.108	NR
W21x50	0.84	0.074	0.097	0.232
W21x57	0.95	0.074	0.086	0.208
W21x62	0.95	0.074	0.086	0.207
W21x68	1.04	0.074	0.079	0.191
W21x73	1.11	0.074	0.074	0.180
W21x83	1.26	0.066	0.066	0.160
W21x93	1.40	0.060	0.060	0.145
W21x101	1.30	0.064	0.064	0.155
W21x111	1.42	0.059	0.059	0.143
W21x122	1.55	0.054	0.054	0.131

			0.050	0.122
W21x147	1.85	0.043	0.045	0.104
W24x55	0.83	0.074	0.098	0.235
W24x62	0.93	0.074	0.088	0.212
W24x68	0.94	0.074	0.087	0.211
W24x76	1.04	0.074	0.079	0.191
W24x84	1.14	0.072	0.072	0.175
W24x94	1.27	0.065	0.065	0.159
W24x104	1.23	0.067	0.067	0.163
W24x117	1.38	0.061	0.061	0.147
W24x131	1.53	0.054	0.054	0.133
W24x146	1.70	0.049	0.049	0.121
W24x162	1.87	0.043	0.045	0.104
W27x84	1.03	0.074	0.080	0.192
W27x94	1.15	0.072	0.072	0.174
W27x102	1.24	0.067	0.067	0.162
W27x114	1.38	0.060	0.060	0.147
W27x146	1.55	0.054	0.054	0.132
W27x161	1.70	0.049	0.049	0.121
W27x178	1.87	0.043	0.045	0.104
W30x99	1.12	0.074	0.074	0.179
W30x108	1.21	0.068	0.068	0.166
W30x116	1.30	0.064	0.064	0.155
W30x124	1.38	0.060	0.060	0.147
W30x132	1.47	0.057	0.057	0.138
W30x173	1.67	0.050	0.050	0.122
W30x191	1.84	0.043	0.046	0.104
W30x211	2.02	0.043	0.043	0.102
W33x118	1.21	0.069	0.069	0.167
W33x130	1.32	0.063	0.063	0.153
W33x141	1.43	0.058	0.058	0.142
W33x152	1.53	0.055	0.055	0.133
W33x201	1.80	0.043	0.047	0.114

W33x241	2.13	0.043	0.043	0.097
W36x135	1.29	0.064	0.064	0.156
W36x150	1.43	0.058	0.058	0.142
W36x160	1.52	0.055	0.055	0.134
W36x170	1.61	0.052	0.052	0.127
W36x182	1.71	0.049	0.049	0.119
W36x194	1.82	0.043	0.046	0.104
W36x210	1.96	0.043	0.043	0.104
W36x230	1.95	0.043	0.043	0.104
W36x245	2.07	0.043	0.043	0.100
W36x260	2.19	0.043	0.043	0.094
W36x280	2.35	0.043	0.043	0.088
W36x300	2.50	0.043	0.043	0.082

RESTRAINED BEAM RATINGS

STEEL SIZE	W/D	1 HR	1-1/2 HR	2 HR	3 HR
W5x19	0.78	0.074	0.074	0.094	NR
W6x16	0.67	0.074	0.074	0.102	NR
W6x20	0.68	0.074	0.074	0.102	NR
W6x25	0.84	0.074	0.074	0.090	NR
W8x21	0.67	0.074	0.074	0.103	NR
W8x24	0.70	0.074	0.074	0.100	NR
W8x28	0.81	0.074	0.074	0.091	NR
W8x31	0.80	0.074	0.074	0.092	NR
W8x35	0.90	0.074	0.074	0.086	NR
W8x40	1.02	0.074	0.074	0.079	NR
W8x48	1.20	0.072	0.072	0.072	NR
W8x58	1.43	0.061	0.061	0.062	NR
W8x67	1.63	0.054	0.054	0.056	NR
W10x26	0.70	0.074	0.074	0.100	NR
W10x30	0.81	0.074	0.074	0.092	NR
W10x33	0.79	0.074	0.074	0.093	NR

W10x45	1.05	0.074	0.074	0.077	NR
W10x49	1.01	0.074	0.074	0.079	NR
W10x54	1.11	0.074	0.074	0.074	NR
W10x60	1.23	0.071	0.071	0.071	NR
W10x68	1.38	0.064	0.064	0.064	NR
W10x77	1.55	0.057	0.057	0.058	NR
W10x88	1.75	0.043	0.043	0.043	0.193
W10x100	1.96	0.043	0.043	0.043	0.193
W10x112	2.17	0.043	0.043	0.043	0.193
W12x30	0.69	0.074	0.074	0.104	NR
W12x35	0.80	0.074	0.074	0.092	NR
W12x40	0.86	0.074	0.074	0.088	NR
W12x45	0.97	0.074	0.074	0.082	NR
W12x50	1.07	0.074	0.074	0.076	NR
W12x53	1.01	0.074	0.074	0.079	NR
W12x58	1.10	0.074	0.074	0.075	NR
W12x65	1.11	0.074	0.074	0.074	NR
W12x72	1.23	0.068	0.068	0.069	NR
W12x79	1.34	0.062	0.062	0.065	NR
W12x87	1.46	0.057	0.057	0.061	NR
W12x96	1.61	0.052	0.052	0.056	NR
W12x106	1.76	0.043	0.043	0.043	0.139
W12x120	1.98	0.043	0.043	0.043	0.139
W12x136	2.21	0.043	0.043	0.043	0.139
W12x152	2.45	0.043	0.043	0.043	0.139
W12x170	2.71	0.043	0.043	0.043	0.139
W12x190	2.99	0.043	0.043	0.043	0.139
W12x210	3.26	0.043	0.043	0.043	0.139
W12x230	3.53	0.043	0.043	0.043	0.139
W12x252	3.82	0.043	0.043	0.043	0.139
W12x279	4.16	0.043	0.043	0.043	0.139
W12x305	4.48	0.043	0.043	0.043	0.139

W14x34	0.72	0.074	0.074	0.098	NR
W14x38	0.81	0.074	0.074	0.092	NR
W14x43	0.87	0.074	0.074	0.088	NR
W14x48	0.96	0.074	0.074	0.082	NR
W14x53	1.05	0.074	0.074	0.077	NR
W14x61	1.09	0.074	0.074	0.075	NR
W14x68	1.21	0.069	0.069	0.070	NR
W14x74	1.31	0.064	0.064	0.066	NR
W14x82	1.44	0.058	0.058	0.061	NR
W14x90	1.29	0.064	0.064	0.067	NR
W14x99	1.42	0.059	0.059	0.062	NR
W14x109	1.55	0.054	0.054	0.058	NR
W14x120	1.69	0.049	0.049	0.054	NR
W14x132	1.85	0.043	0.045	0.043	0.139
W14x145	1.97	0.043	0.043	0.043	0.139
W14x159	2.14	0.043	0.043	0.043	0.139
W14x176	2.36	0.043	0.043	0.043	0.139
W14x193	2.57	0.043	0.043	0.043	0.139
W14x211	2.78	0.043	0.043	0.043	0.139
W14x233	3.04	0.043	0.043	0.043	0.139
W14x257	3.32	0.043	0.043	0.043	0.139
W14x283	3.62	0.043	0.043	0.043	0.139
W14x311	3.93	0.043	0.043	0.043	0.139
W14x342	4.27	0.043	0.043	0.043	0.139
W14x370	4.57	0.043	0.043	0.043	0.139
W14x398	4.87	0.043	0.043	0.043	0.139
W14x426	5.15	0.043	0.043	0.043	0.139
W14x455	5.45	0.043	0.043	0.043	0.139
W14x500	5.89	0.043	0.043	0.043	0.139
W14x550	6.37	0.043	0.043	0.043	0.139
W14x605	6.89	0.043	0.043	0.043	0.139
W14x665	7.43	0.043	0.043	0.043	0.139

W16x36	0.70	0.074	0.074	0.100	NR
W16x40	0.77	0.074	0.074	0.094	NR
W16x45	0.87	0.074	0.074	0.088	NR
W16x50	0.96	0.074	0.074	0.082	NR
W16x57	1.08	0.074	0.074	0.076	NR
W16x67	1.08	0.074	0.074	0.076	NR
W16x77	1.24	0.067	0.067	0.067	NR
W16x89	1.42	0.059	0.059	0.059	NR
W16x100	1.58	0.053	0.053	0.057	NR
W18x35	0.67	0.074	0.074	0.103	NR
W18x40	0.76	0.074	0.074	0.095	NR
W18x46	0.87	0.074	0.074	0.088	NR
W18x50	0.88	0.074	0.074	0.087	NR
W18x55	0.96	0.074	0.074	0.082	NR
W18x60	1.04	0.074	0.074	0.078	NR
W18x65	1.12	0.074	0.074	0.074	NR
W18x71	1.22	0.068	0.068	0.070	NR
W18x76	1.12	0.074	0.074	0.074	NR
W18x86	1.26	0.066	0.066	0.066	NR
W18x97	1.41	0.059	0.059	0.062	NR
W18x106	1.53	0.055	0.055	0.059	NR
W18x119	1.71	0.049	0.049	0.054	NR
W21x44	0.74	0.074	0.074	0.097	NR
W21x50	0.84	0.074	0.074	0.090	NR
W21x57	0.95	0.074	0.074	0.083	NR
W21x62	0.95	0.074	0.074	0.083	NR
W21x68	1.04	0.074	0.074	0.078	NR
W21x73	1.11	0.074	0.074	0.074	NR
W21x83	1.26	0.066	0.066	0.068	NR
W21x93	1.40	0.060	0.060	0.063	NR
W21x101	1.30	0.064	0.064	0.066	NR

W21x122	1.55	0.054	0.054	0.058	NR
W21x132	1.67	0.050	0.050	0.055	NR
W21x147	1.85	0.043	0.043	0.050	0.139
W24x55	0.83	0.074	0.074	0.090	NR
W24x62	0.93	0.074	0.074	0.084	NR
W24x68	0.94	0.074	0.074	0.084	NR
W24x76	1.04	0.074	0.074	0.078	NR
W24x84	1.14	0.072	0.072	0.073	NR
W24x94	1.27	0.065	0.065	0.067	NR
W24x104	1.23	0.067	0.067	0.069	NR
W24x117	1.38	0.061	0.061	0.064	NR
W24x131	1.53	0.054	0.054	0.059	NR
W24x146	1.70	0.049	0.049	0.054	NR
W24x162	1.87	0.043	0.043	0.050	0.139
W27x84	1.03	0.074	0.074	0.078	NR
W27x94	1.15	0.072	0.072	0.073	NR
W27x102	1.24	0.067	0.067	0.069	NR
W27x114	1.38	0.060	0.060	0.063	NR
W27x146	1.55	0.054	0.054	0.058	NR
W27x161	1.70	0.049	0.049	0.054	NR
W27x178	1.87	0.043	0.043	0.050	0.139
W30x99	1.12	0.074	0.074	0.074	NR
W30x108	1.21	0.068	0.068	0.070	NR
W30x116	1.30	0.064	0.064	0.066	NR
W30x124	1.38	0.060	0.060	0.063	NR
W30x132	1.47	0.057	0.057	0.061	NR
W30x173	1.67	0.050	0.050	0.055	NR
W30x191	1.84	0.043	0.043	0.051	0.139
W30x211	2.02	0.043	0.043	0.047	0.139
W33x118	1.21	0.069	0.069	0.070	NR
W33x130	1.32	0.063	0.063	0.066	NR
W33x141	1.43	0.058	0.058	0.062	NR

	1.93	0.053	0.053	0.059	NR
W33x201	1.80	0.043	0.043	0.052	0.139
W33x221	1.96	0.043	0.043	0.048	0.139
W33x241	2.13	0.043	0.043	0.045	0.139
W36x135	1.29	0.064	0.064	0.067	NR
W36x150	1.43	0.058	0.058	0.062	NR
W36x160	1.52	0.055	0.055	0.059	NR
W36x170	1.61	0.052	0.052	0.056	NR
W36x182	1.71	0.049	0.049	0.054	NR
W36x194	1.82	0.043	0.043	0.043	0.139
W36x210	1.96	0.043	0.043	0.043	0.139
W36x230	1.95	0.043	0.043	0.043	0.139
W36x245	2.07	0.043	0.043	0.043	0.139
W36x260	2.19	0.043	0.043	0.043	0.139
W36x280	2.35	0.043	0.043	0.043	0.139
W36x300	2.50	0.043	0.043	0.043	0.139

NR - Not Rated

CARBOLINE CO — Type Nullifire S605. Investigated for Interior General Purpose.

*Bearing the UL Classification Marking

Recommendation - That the above described assemblies be accepted for Class II Buildings only, as having the fire resistance ratings given above, when members framing into the columns have at least the same fire resistance rating, provided that following requirements for application and protection of the mastic coating fireproofing be adhered to:

1. Where used for protection of floor ceiling and/or assemblies in roof/ceiling in fireproof buildings each such assembly shall bear an identifying tag installed at each beam. Subject tag shall be of metal construction mechanically attached to such beams and shall state the following: "this beam has been fireproofed with MEA approved Nullifire S605 with Type TP615 top-coat finish and such finish shall not be removed" nor any subsequent coating shall be applied other than Nullifire S605 with Type TP615 top-coat.

2. The general contractor and the owner shall provide qualified personnel to supervise the application of the sprayed-on fireproofing. They shall certify to the Department of Buildings that the finished fireproofing of the completed building is in full compliance with the acceptance requirements and drawings approved by the Department of Buildings.

3. The installation of the sprayed on fire protection shall be subject to the controlled inspection requirements of Section 27-132.

4. The use of this material shall be subject to all pertinent regulations of the Department of Air Resources and the Department of Health.

5. All installations shall comply with 118-68 GR, the New York City Building Code, the Fire Department Directives, the manufacturer's instructions and laboratory recommendation.

6. All shipments and deliveries of the materials comprising this assembly shall be accompanied by a certificate or label certifying that the materials shipped or delivered are equivalent to those tested and acceptable for use, as provided for in Section 27-131 of the Building Code.

Final Acceptance JUL 27 2000

Examined by S Derkhodam