ONLINE CERTIFICATIONS DIRECTORY

BXUV.D936
Fire Resistance Ratings - ANSI/UL 263

Page Bottom

Design/System/Construction/Assembly Usage Disclaimer

- Authorities Having Jurisdiction should be consulted in all cases as to the particular requirements covering the installation and use of UL Listed or Classified products, equipment, system, devices, and materials.
- Authorities Having Jurisdiction should be consulted before construction.
- Fire resistance assemblies and products are developed by the design submitter and have been investigated by UL for compliance with applicable requirements. The published information cannot always address every construction nuance encountered in the field.
- When field issues arise, it is recommended the first contact for assistance be the technical service staff provided by the product manufacturer noted for the design. Users of fire resistance assemblies are advised to consult the general Guide Information for each product category and each group of assemblies. The Guide Information includes specifics concerning alternate materials and alternate methods of construction.
- Only products which bear UL's Mark are considered as Classified, Listed, or Recognized.

Fire Resistance Ratings - ANSI/UL 263

See General Information for Fire Resistance Ratings - ANSI/UL 263

Design No. D936

December 14, 2010

Restrained Assembly Ratings - 2 and 3 Hr. (See Items 2, 5 and 7)

Unrestrained Assembly Ratings - 1, 1-1/2, 2 and 3 Hr. (See Items 2, 5 and 7)

Unrestrained Beam Ratings - 1, 1-1/2, 2 and 3 Hr. (See Items 2, 5 and 7)

Load Restricted for Canadian Applications — See Guide BXUV7

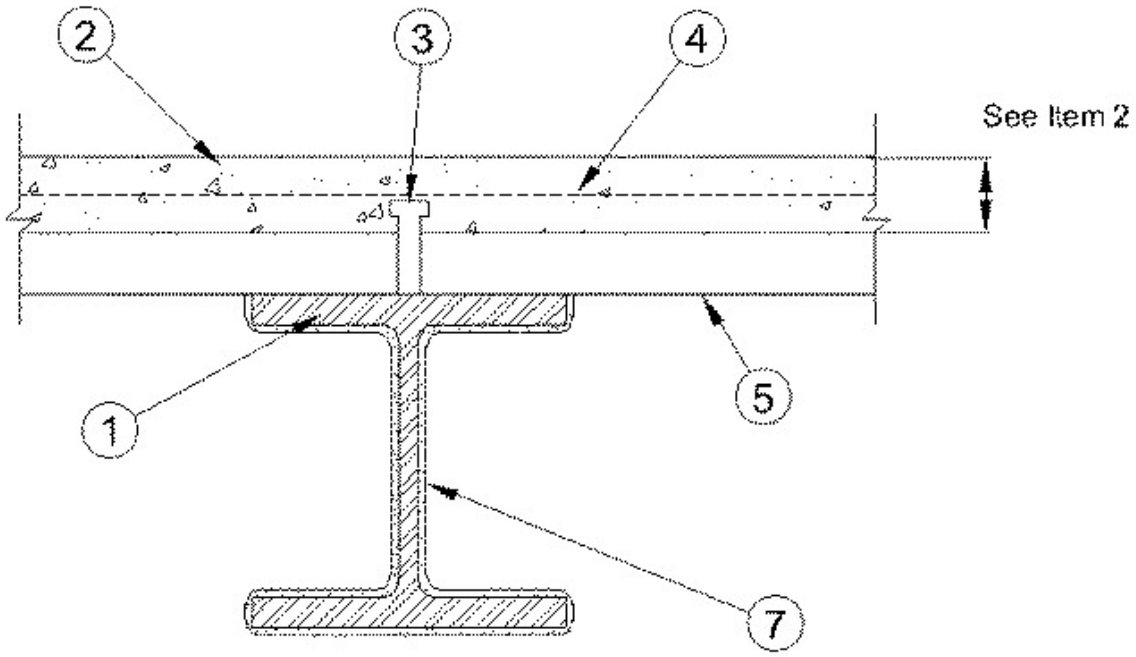

1. **Steel Beams —** Any wide flange steel size shown in the table in Item 7. Beams shall be primed with a modified alkyd, or epoxy based primer.

2. **Normal Weight or Lightweight Concrete —** Normal weight concrete, carbonate or siliceous aggregate, 145 lb/ftor minus 3 lb/ftweight, 3000 psi compressive strength, vibrated. Lightweight concrete, expanded shale, clay or slate aggregate by rotary-kiln method, 102-120 lb/ftweight, 3000 psi compressive strength, vibrated, 4 to 7 percent entrained air. Min thickness shown in the table below:

Restrained Assembly Rating Hr	Concrete (Type)	Concrete Unit Weight pcf	Concrete Thkns In.
1	Normal Weight	147-153	3-1/2
1-1/2	Normal Weight	147-153	4
2	Normal Weight	147-153	4-1/2
3	Normal Weight	147-153	5-1/4
3/4 or 1 (See Item 6)	Lightweight	107-113	2-1/2
1	Lightweight	107-120	2-5/8
1-1/2	Lightweight	107-113	3
2	Lightweight	107-113	3-1/4
2	Lightweight	107-116	3-1/4*
2	Lightweight	114-120	3-1/2
3	Lightweight	107-113	4-3/16
3	Lightweight	114-120	4-7/16

*For use with 2 or 3 in. steel floor and form units only.

3. **Shear Connectors (Optional) —** Studs, 3/4 in. diam by 4-1/2 in. long, headed type or equivalent per AISC specification. Welded to the top flange of the beam, through the deck.

4. **Welded Wire Fabric —** 6x6 — W1.4xW1.4.

5. **Steel Floor and Form Units* —** Composite 1-1/2, 2, or 3 in. deep galv Units. Fluted units may be uncoated. Min gauges 22 MSG for fluted and 20/20 MSG for cellular. Any combination of fluted and cellular units may be used. Spacing of welds attaching units to supports shall be 12 in. OC max unless specified otherwise, adjacent units button-punched or welded together at side joints and, unless specified otherwise for specific unit types, spacing of all side joint fastening systems shall not exceed 36 in. OC.

CONSOLIDATED SYSTEMS INC — 24 in. wide Types CFD-2, -3; 24, 30 or 36 in. wide Type CFD-1.5;12, 24 or 36 in. wide Types Mac-Lok 2, Mac-Lok 3; 12 in. wide Mac-Way Cellular Types 2-633MTWA, 3-633MTWA, 2-633MTWV, 3-633MTWV. For the 1, 1-1/2, 2h Restrained Assembly Ratings and the 1h Unrestrained Assembly and Beam Rating, 12 in. wide, Type 1.5-633 MTWA may be used. Types CFD-1.5, CFD-2, CFD-3, Mac-Lok 2, Mac-Lok 3 may be phos/ptd. Two rows of steel studs with discs (Item 7) shall be welded along the sides of the Types 2-633MTWV, 3-633MTWV cellular units a max of 22 in. OC.

DESIGN ASSISTANCE CONSTRUCTION

SYSTEMS INC — 24 in. wide Type DACS2.0CD, or DACS3.0CD.

NEW MILLENNIUM BUILDING SYSTEMS L L C — Type 1.5CD, 2.0CD or 3.0CD. Units may be phos/painted or galvanized.

VULCRAFT, DIV OF NUCOR CORP — 24, 30 or 36 in. wide Type 1.5VLI, 1.5VLP;24 or 36 in. wide Types 2VLI, 3VLI, 2VLP, 3VLP. Types 1.5VLI, 2VLI, 3VLI units may be phos/ptd; 24 or 36 in. wide Types 2VLJ, 3VLJ units (+) may be used for max 2 hr. Restrained Assembly.

(+)Side joints of Type 2VLJ or 3VLJ units may be fastened together with No. 8-3/4 in. long self-drilling Tek screws driven diagonally from the top side through the joint of the units at 36 in. OC max.

The Unrestrained Assembly Rating is equal to the Unrestrained Beam Rating for a max of 3

Hr. and is limited to the following units and limitations:

(a) 1-1/2 in. deep, 24 in. wide, 22 MSG or thicker fluted with clear spans not more than 7 ft 8 in.

(b) 1-1/2 in. deep, 24 in. wide, 20 MSG or thicker fluted with clear spans not more than 8 ft 8 in.

(c) 1-1/2 in. deep, 24 in. wide, 16 MSG or thicker fluted and 18/18 MDG or thicker cellular with clear spans not more than 9 ft 11 in.

(d) 3 in. deep, 36 in. wide, 18 MSG or thicker fluted and 24 in. wide, 20/18 MSG ot thicker cellular with clear spans not more than 13 ft 2 in.

6. **Joint Cover —** (Not Shown) —2 in. wide pressure sensitive cloth tape.

7. **Mastic Coating* —** Coating spray, brush or towel applied directly from containers to desired thickness. See table below for appropriate final dry thickness. After each coat, the surface shall be lightly rolled with a paint roller. Flutes above beam to be completely filled with mineral wool insulation having a minimum density of 6 lb/fte top flange of the beam shall be protected with the same thickness of coating as required on the beam.

Restrained Assembly Rating (Hr)		**2**			**3**		
Unrestrained Beam Rating (Hr)		**1**	**1-1/2**	**2**	**1-1/2**	**2**	**3**
Steel Size	**W/D**	**Thickness (In.)**					
W5x19	0.78	0.094	0.094	0.143	0.253	0.253	NR
W6x16	0.67	0.102	0.102	0.143	0.274	0.274	NR
W6x20	0.68	0.102	0.102	0.143	0.273	0.273	NR
W6x25	0.84	0.090	0.090	0.143	0.241	0.241	NR
W8x21	0.67	0.103	0.103	0.143	0.275	0.275	NR
W8x24	0.70	0.100	0.100	0.143	0.268	0.268	NR
W8x28	0.81	0.091	0.091	0.143	0.246	0.246	NR
W8x31	0.80	0.092	0.092	0.143	0.248	0.248	NR
W8x35	0.90	0.086	0.089	0.143	0.231	0.231	NR
W8x40	1.02	0.079	0.081	0.143	0.213	0.213	NR
W8x48	1.20	0.070	0.070	0.143	0.189	0.189	NR
W8x58	1.43	0.062	0.062	0.142	0.167	0.167	NR
W8x67	1.63	0.056	0.056	0.125	0.151	0.151	NR
W10x26	0.70	0.100	0.100	0.143	0.268	0.268	NR
W10x30	0.81	0.092	0.092	0.143	0.247	0.247	NR
W10x33	0.79	0.093	0.093	0.143	0.250	0.250	NR
W10x39	0.92	0.084	0.089	0.143	0.227	0.227	NR
W10x45	1.05	0.077	0.078	0.143	0.208	0.208	NR
W10x49	1.01	0.079	0.081	0.143	0.214	0.214	NR
W10x54	1.11	0.074	0.075	0.143	0.201	0.201	NR
W10x60	1.23	0.069	0.069	0.143	0.187	0.187	NR
W10x68	1.38	0.064	0.064	0.143	0.172	0.172	NR
W10x77	1.55	0.058	0.058	0.132	0.158	0.158	NR
W10x88	1.75	0.046	0.046	0.117	0.144	0.144	0.167
W10x100	1.96	0.046	0.046	0.105	0.131	0.131	0.167

W10x112	2.17	0.046	0.046	0.095	0.121	0.121	0.167
W12x30	0.69	0.101	0.101	0.143	0.270	0.270	NR
W12x35	0.80	0.092	0.092	0.143	0.247	0.247	NR
W12x40	0.86	0.088	0.089	0.143	0.237	0.237	NR
W12x45	0.97	0.082	0.085	0.143	0.220	0.220	NR
W12x50	1.07	0.076	0.077	0.143	0.206	0.206	NR
W12x53	1.01	0.079	0.081	0.143	0.214	0.214	NR
W12x58	1.10	0.075	0.075	0.143	0.202	0.202	NR
W12x65	1.11	0.074	0.074	0.143	0.200	0.200	NR
W12x72	1.23	0.069	0.069	0.143	0.187	0.187	NR
W12x79	1.34	0.065	0.065	0.143	0.176	0.176	NR
W12x87	1.46	0.061	0.061	0.139	0.164	0.164	NR
W12x96	1.61	0.056	0.056	0.127	0.153	0.153	NR
W12x106	1.76	0.046	0.046	0.116	0.143	0.143	0.167
W12x120	1.98	0.046	0.046	0.104	0.130	0.130	0.167
W12x136	2.21	0.046	0.046	0.093	0.119	0.119	0.167
W12x152	2.45	0.046	0.046	0.084	0.109	0.109	0.167
W12x170	2.71	0.046	0.046	0.076	0.100	0.100	0.167
W12x190	2.99	0.046	0.046	0.069	0.092	0.092	0.167
W12x210	3.26	0.046	0.046	0.063	0.085	0.085	0.167
W12x230	3.53	0.046	0.046	0.058	0.079	0.079	0.167
W12x252	3.82	0.046	0.046	0.054	0.074	0.074	0.167
W12x279	4.16	0.046	0.046	0.049	0.068	0.068	0.167
W12x305	4.48	0.046	0.046	0.053	0.064	0.064	0.167
W12x336	4.85	0.046	0.046	0.053	0.059	0.059	0.167
W14x34	0.72	0.098	0.098	0.143	0.263	0.263	NR
W14x38	0.81	0.092	0.092	0.143	0.247	0.247	NR
W14x43	0.87	0.088	0.089	0.143	0.236	0.236	NR
W14x48	0.96	0.082	0.085	0.143	0.221	0.221	NR
W14x53	1.05	0.077	0.078	0.143	0.208	0.208	NR
W14x61	1.09	0.075	0.076	0.143	0.203	0.203	NR
W14x68	1.21	0.070	0.070	0.143	0.189	0.189	NR
W14x74	1.31	0.066	0.066	0.143	0.179	0.179	NR
W14x82	1.44	0.061	0.061	0.141	0.167	0.167	NR
W14x90	1.29	0.067	0.067	0.143	0.180	0.180	NR
W14x99	1.42	0.062	0.062	0.143	0.169	0.169	NR
W14x109	1.55	0.058	0.058	0.131	0.158	0.158	NR
W14x120	1.69	0.054	0.054	0.121	0.147	0.147	NR

W14x132	1.85	0.046	0.046	0.053	0.137	0.137	0.167
W14x145	1.97	0.046	0.046	0.053	0.131	0.131	0.167
W14x159	2.14	0.046	0.046	0.053	0.122	0.122	0.167
W14x176	2.36	0.046	0.046	0.053	0.113	0.113	0.167
W14x193	2.57	0.046	0.046	0.053	0.105	0.105	0.167
W14x211	2.78	0.046	0.046	0.053	0.098	0.098	0.167
W14x233	3.04	0.046	0.046	0.053	0.090	0.090	0.167
W14x257	3.32	0.046	0.046	0.053	0.084	0.084	0.167
W14x283	3.62	0.046	0.046	0.053	0.078	0.078	0.119
W14x311	3.93	0.046	0.046	0.053	0.072	0.072	0.167
W14x342	4.27	0.046	0.046	0.053	0.067	0.067	0.167
W14x370	4.57	0.046	0.046	0.053	0.062	0.062	0.167
W14x398	4.87	0.046	0.046	0.053	0.059	0.059	0.167
W14x426	5.15	0.046	0.046	0.053	0.056	0.056	0.167
W14x455	5.45	0.046	0.046	0.053	0.053	0.053	0.167
W14x500	5.89	0.046	0.046	0.053	0.049	0.049	0.167
W14x550	6.37	0.046	0.046	0.053	0.045	0.045	0.167
W14x605	6.89	0.046	0.046	0.053	0.042	0.042	0.167
W14x665	7.43	0.046	0.046	0.053	0.039	0.039	0.167
W14x730	7.99	0.046	0.046	0.053	0.036	0.036	0.167
W16x36	0.70	0.100	0.100	0.143	0.268	0.268	NR
W16x40	0.77	0.094	0.094	0.143	0.253	0.253	NR
W16x45	0.87	0.088	0.089	0.143	0.236	0.236	NR
W16x50	0.96	0.082	0.086	0.143	0.222	0.222	NR
W16x57	1.08	0.076	0.076	0.143	0.204	0.204	NR
W16x67	1.08	0.076	0.076	0.143	0.204	0.204	NR
W16x77	1.24	0.069	0.069	0.143	0.186	0.186	NR
W16x89	1.42	0.062	0.062	0.143	0.169	0.169	NR
W16x100	1.58	0.057	0.057	0.129	0.155	0.155	NR
W18x35	0.67	0.103	0.103	0.143	0.275	0.275	NR
W18x40	0.76	0.095	0.095	0.143	0.256	0.256	NR
W18x46	0.87	0.088	0.089	0.143	0.236	0.236	NR
W18x50	0.88	0.087	0.089	0.143	0.235	0.235	NR
W18x55	0.96	0.082	0.085	0.143	0.221	0.221	NR
W18x60	1.04	0.078	0.079	0.143	0.209	0.209	NR
W18x65	1.12	0.074	0.074	0.143	0.199	0.199	NR
W18x71	1.22	0.070	0.070	0.143	0.188	0.188	NR
W18x76	1.12	0.074	0.074	0.143	0.200	0.200	NR

W18x86	1.26	0.068	0.068	0.143	0.184	0.184	NR
W18x97	1.41	0.062	0.062	0.143	0.169	0.169	NR
W18x106	1.53	0.059	0.059	0.133	0.159	0.159	NR
W18x119	1.71	0.054	0.054	0.120	0.146	0.146	NR
W21x44	0.74	0.097	0.097	0.143	0.259	0.259	NR
W21x50	0.84	0.090	0.090	0.143	0.241	0.241	NR
W21x57	0.95	0.083	0.086	0.143	0.223	0.223	NR
W21x62	0.95	0.083	0.086	0.143	0.222	0.222	NR
W21x68	1.04	0.078	0.079	0.143	0.210	0.210	NR
W21x73	1.11	0.074	0.074	0.143	0.200	0.200	NR
W21x83	1.26	0.068	0.068	0.143	0.184	0.184	NR
W21x93	1.40	0.063	0.063	0.143	0.170	0.170	NR
W21x101	1.30	0.066	0.066	0.143	0.180	0.180	NR
W21x111	1.42	0.062	0.062	0.143	0.168	0.168	NR
W21x122	1.55	0.058	0.058	0.131	0.157	0.157	NR
W21x132	1.67	0.055	0.055	0.122	0.148	0.148	NR
W21x147	1.85	0.046	0.046	0.111	0.137	0.137	0.167
W24x55	0.83	0.090	0.090	0.143	0.243	0.243	NR
W24x62	0.93	0.084	0.088	0.143	0.226	0.226	NR
W24x68	0.94	0.084	0.087	0.143	0.225	0.225	NR
W24x76	1.04	0.078	0.079	0.143	0.210	0.210	NR
W24x84	1.14	0.073	0.073	0.143	0.196	0.196	NR
W24x94	1.27	0.067	0.067	0.143	0.182	0.182	NR
W24x104	1.23	0.069	0.069	0.143	0.187	0.187	NR
W24x117	1.38	0.064	0.064	0.143	0.172	0.172	NR
W24x131	1.53	0.059	0.059	0.133	0.159	0.159	NR
W24x146	1.70	0.054	0.054	0.121	0.147	0.147	NR
W24x162	1.87	0.046	0.046	0.053	0.136	0.136	0.167
W27x84	1.03	0.078	0.080	0.143	0.211	0.211	NR
W27x94	1.15	0.073	0.073	0.143	0.196	0.196	NR
W27x102	1.24	0.069	0.069	0.143	0.186	0.186	NR
W27x114	1.38	0.063	0.063	0.143	0.172	0.172	NR
W27x146	1.55	0.058	0.058	0.132	0.158	0.158	NR
W27x161	1.70	0.054	0.054	0.121	0.147	0.147	NR
W27x178	1.87	0.046	0.046	0.110	0.136	0.136	0.167
W30x99	1.12	0.074	0.074	0.143	0.199	0.199	NR
W30x108	1.21	0.070	0.070	0.143	0.188	0.188	NR
W30x116	1.30	0.066	0.066	0.143	0.180	0.180	NR

W30x124	1.38	0.063	0.063	0.143	0.171	0.171	NR
W30x132	1.47	0.061	0.061	0.138	0.164	0.164	NR
W30x173	1.67	0.055	0.055	0.122	0.149	0.149	NR
W30x191	1.84	0.046	0.046	0.053	0.138	0.138	0.167
W30x211	2.02	0.046	0.046	0.053	0.128	0.128	0.167
W33x118	1.21	0.070	0.070	0.143	0.189	0.189	NR
W33x130	1.32	0.066	0.066	0.143	0.177	0.177	NR
W3x141	1.43	0.062	0.062	0.142	0.168	0.168	NR
W33x152	1.53	0.059	0.059	0.133	0.159	0.159	NR
W33x201	1.80	0.046	0.046	0.053	0.141	0.141	0.167
W33x221	1.96	0.046	0.046	0.053	0.131	0.131	0.167
W33x241	2.13	0.049	0.049	0.053	0.122	0.122	0.167
W36x135	1.29	0.067	0.067	0.143	0.180	0.180	NR
W36x150	1.43	0.062	0.062	0.143	0.168	0.168	NR
W36x160	1.52	0.059	0.059	0.143	0.160	0.160	NR
W36x170	1.61	0.056	0.056	0.143	0.153	0.153	NR
W36x182	1.71	0.054	0.054	0.143	0.146	0.146	NR
W36x194	1.82	0.046	0.046	0.053	0.139	0.139	0.167
W36x210	1.96	0.046	0.046	0.053	0.131	0.131	0.167
W36x230	1.95	0.046	0.046	0.053	0.132	0.132	0.167
W36x245	2.07	0.046	0.046	0.053	0.126	0.126	0.167
W36x260	2.19	0.046	0.046	0.053	0.120	0.120	0.167
W36x280	2.35	0.046	0.046	0.053	0.113	0.113	0.119
W36x300	2.50	0.046	0.046	0.053	0.107	0.107	0.167

NR - Not Rated

CARBOLINE CO — Type Nullifire S606. Investigated for Interior Condition Space Purpose and Interior General Purpose.(See Item 8)

8. **Top Coat —** For Interior General Purpose Type Carboguard 1340 or Type Rustbond Penetrating Sealer intermediate coat applied over the base coat at 0.002 in. thickness and Type Carbothane 133HB top-coat, Type Carbocrylic 3359 or Type Carbothane 133VOC top-coat or Carbothane 133MC top-coat applied over the intermediate coat at 0.003 in. thickness.

*Bearing the UL Classification Mark

Last Updated on 2010-12-14

Copyright © 2011 Underwriters Laboratories Inc.®

The appearance of a company's name or product in this database does not in itself assure that products so identified have been manufactured under UL's Follow-Up Service. Only those products bearing the UL Mark should be considered to be Listed and covered under UL's Follow-Up Service. Always look for the Mark on the product.

UL permits the reproduction of the material contained in the Online Certification Directory subject to the following conditions: 1. The Guide Information, Designs and/or Listings (files) must be presented in their entirety and in a non-misleading manner, without any manipulation of the

data (or drawings). 2. The statement "Reprinted from the Online Certifications Directory with permission from Underwriters Laboratories Inc." must appear adjacent to the extracted material. In addition, the reprinted material must include a copyright notice in the following format: "Copyright © 2011 Underwriters Laboratories Inc.®"

An independent organization working for a safer world with integrity, precision and knowledge.